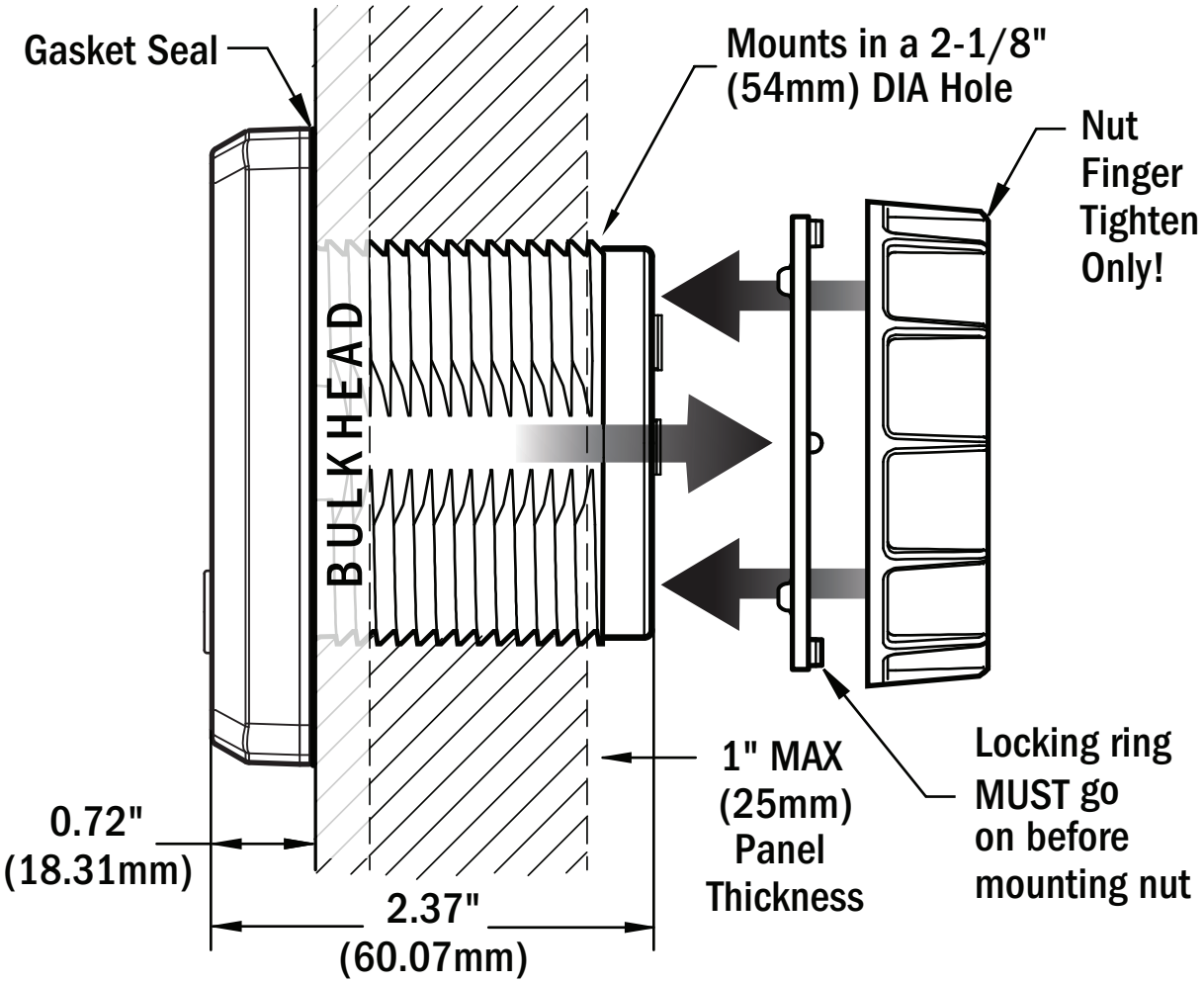
Gasket Seal
Mounts in a 2-1/8"
(54mm) DIA Hole
Nut
Finger
Tighten
Only!
BULKHEAD
1" MAX
(25mm)
Panel
Thickness
Locking ring
MUST go
on before
mounting nut
0.72"
(18.31mm)
2.37"
(60.07mm)